2018-06-28

Manfrotto
Imagine More

ART. 509PLONG

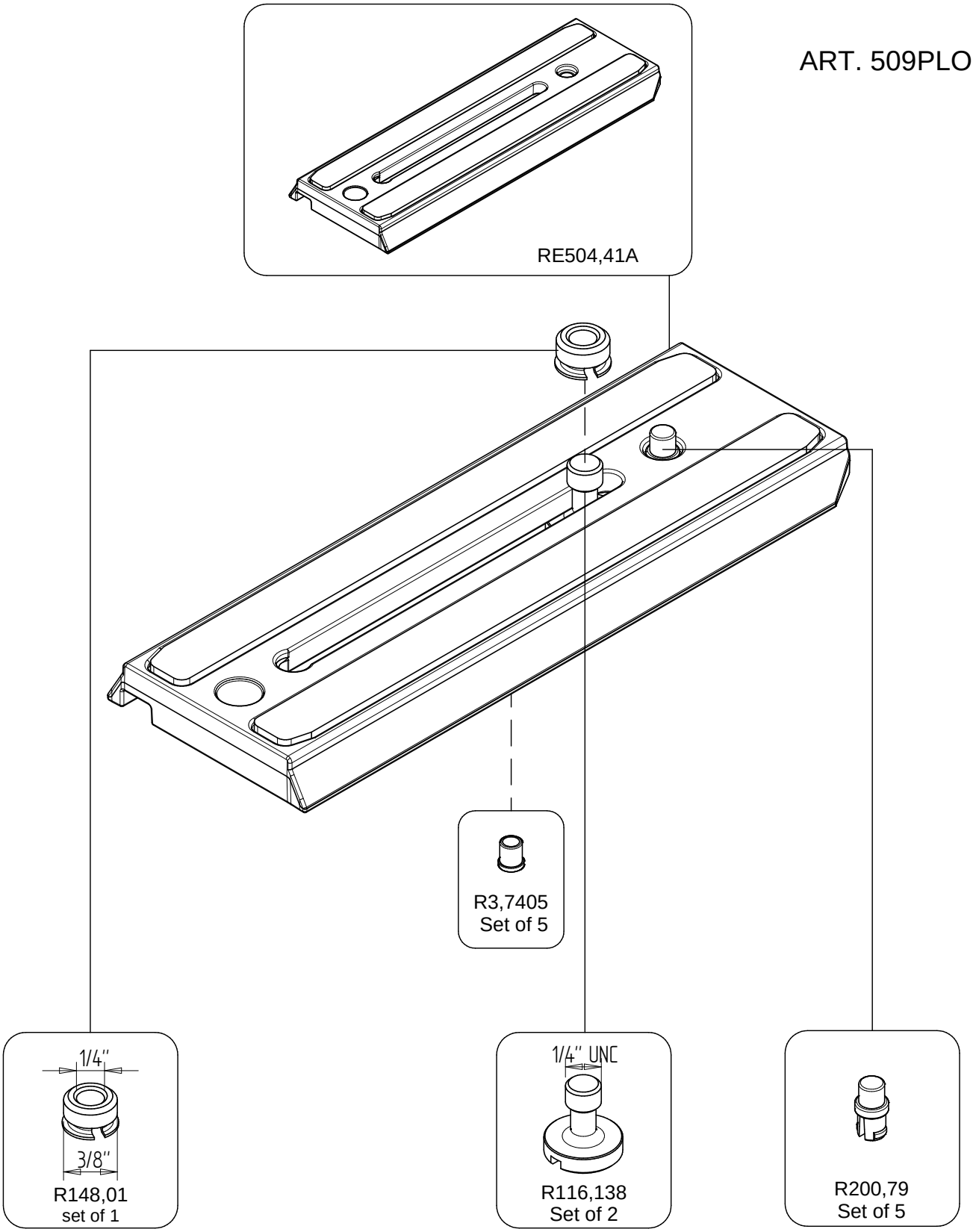

RI,357,29,04
Set of 4