2007-01-11

Manfrotto

PROFESSIONAL CAMERA SUPPORTS
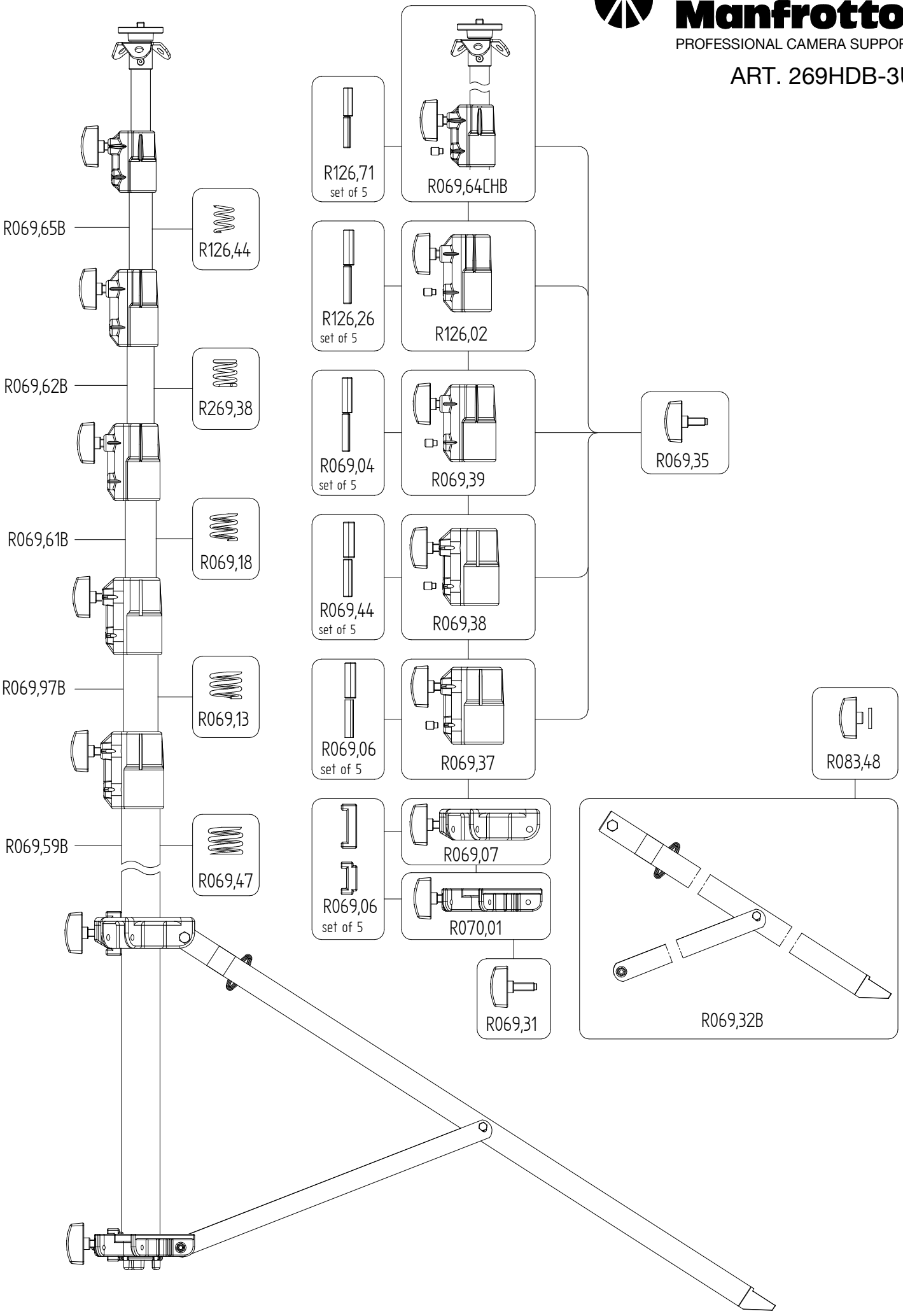
ART. 269HDB-3U